THIS COPY IS PROVIDED ON A RESTRICTED BASIS AND IS NOT TO BE USED IN ANY WAY DETRIMENTAL TO THE INTERESTS OF PANDUIT CORP.

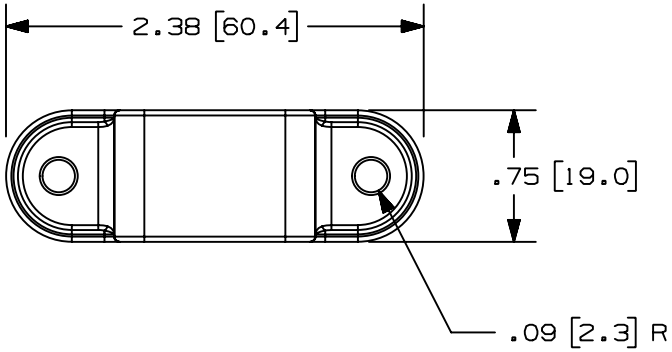

PANDUIT P/N	WEIGHT
LMD5	.09 LBS/10 PCS. .4 G/10 PCS.

A

NOTES:
1. SEE CURRENT CATALOG FOR ADDITIONAL PART NUMBER SUFFIXES TO INDICATE COLOR AND OR PACKAGE QUANTITY.
2. DIMENSIONS IN PARENTHESIS ARE IN METRIC.
3. INTERFERENCE FIT BETWEEN STRAP AND RACEWAY FOR EASE OF INSTALLATION.
4. STRAPS CAN BE USED AS COUPLER BETWEEN RACEWAY SECTIONS.
5. STRAPS CAN BE USED WITH LD AND LDP RACEWAYS TO PROVIDE COMPLETE TAMPER RESISTANCE.

B

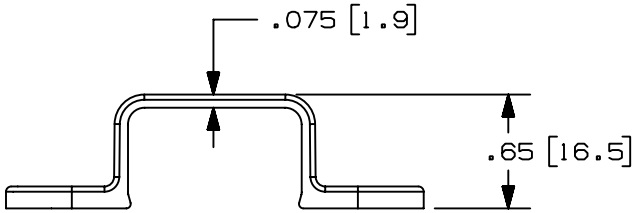

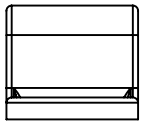

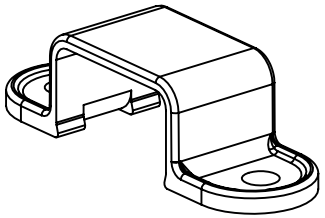

REV	DATE	BY	CHK	DESCRIPTION	ECN - R		CUST	SUP
2	03-08-04	JHEP	RGRO	B. REMOVED CD FROM NOTE 5	35541-45	RGRO	RGRO	
1	07-08-99	DW	HIW	A. REVISED MATERIAL AND WEIGHT	35541-45	HIW	HIW	
R	10-02-96	PM	CEF	RELEASED TO PRODUCTION	35541-45	CEF	CEF	

CAD FILENAME/LAYERS: D35541CS_LMD5_C_02.PRT

PANDUIT CORP. TINLEY PARK, ILLINOIS

MOUNTING STRAP FOR LDS5
DOUBLE HOLE (LMD5)
CUSTOMER DRAWING

UNLESS OTHERWISE SPECIFIED, DIMENSIONAL TOLERANCES ARE:
(.X) ± (.XXX) ±.010 [.3]
(.XX) ±.03 [.8] ANGLES ±

UNLESS OTHERWISE SPECIFIED, ALL DIMENSIONS ARE GIVEN IN INCHES, THIRD ANGLE PROJECTION.

DRAWN BY: PM
DATE: 10-02-96
CHK'D: CEF

MAT'L: PVC

A

SCALE: FULL
DRAWING NO.: 35541-45
DWG SIZE: A